# Partdrawing for HP2071F - Pagina 1

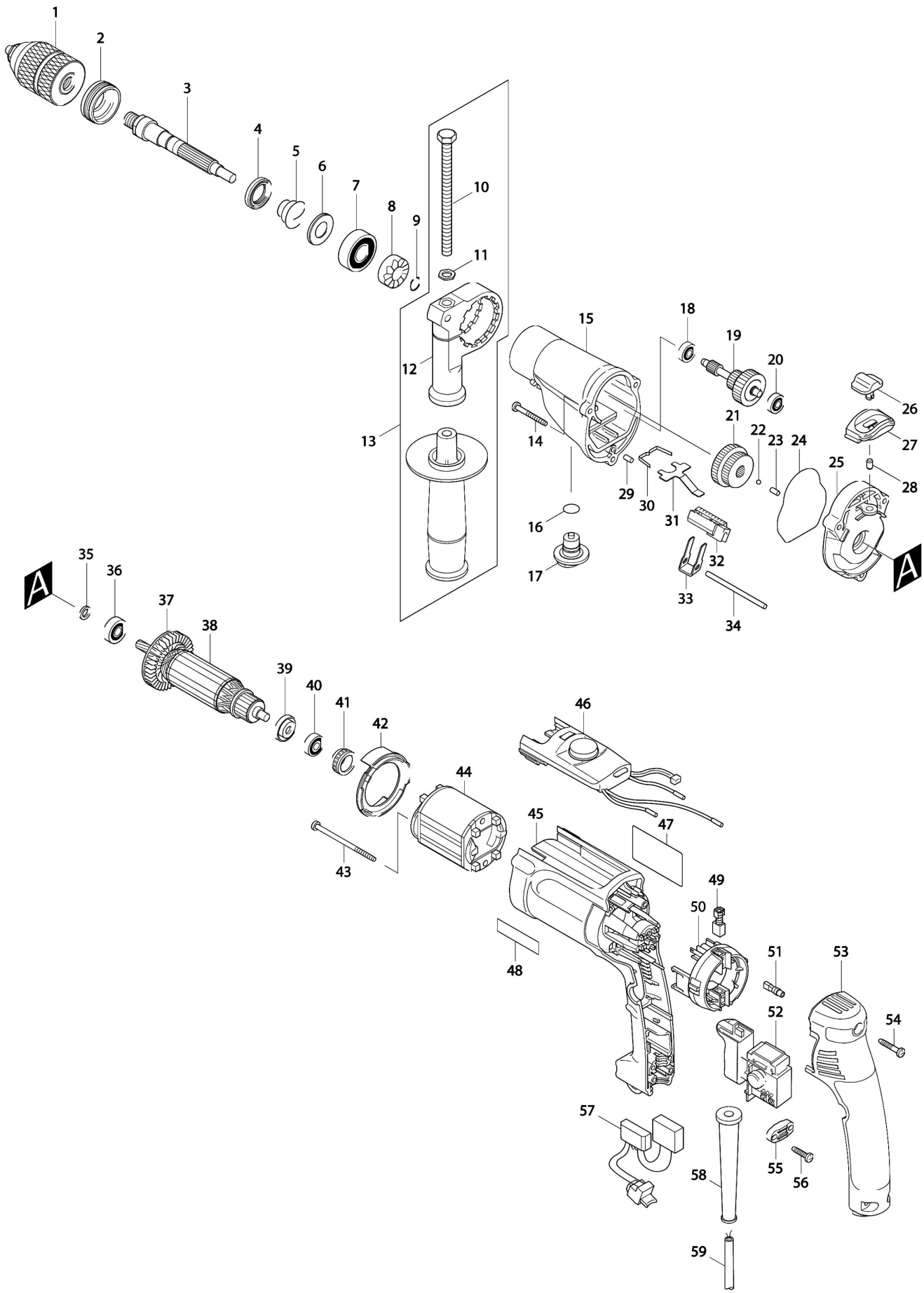

# Partdrawing for HP2071F - Pagina 1

| Nr. | Part nr. | Name |
|---|---|---|
| 001 | 192664-5 | Boorkop snelspan 1,5-13mm |
| 002 | 285839-4 | Lagerborging Hp2051/F |
| 003 | 324247-5 | As Hp2051/F |
| 004 | 213314-0 | Oliekeerring 19 Hp2030 |
| 005 | 233921-3 | Drukveer Con Hp2051/F |
| 006 | 345224-4 | Ring Hp2051/F |
| 007 | 211228-7 | Kogellager 6202Llb A |
| 008 | 223141-7 | Nokkenschijf (A) Hp2071/F |
| 009 | 233920-5 | Veerring 11 Hp2051/F |
| 010 | 265583-9 | Zeskantbout M8X120Mm A |
| 011 | 345280-4 | Sluitring Zeskant Hp2051/F |
| 013 | 135302-6 | Zijhandgreep boormachine/combihamer |
| 014 | 266351-3 | Schroef 4X35 A |
| 015 | 153621-8 | Tandwielhuis Hp2071/F |
| 016 | 213162-7 | O-Ring 14 2414B A |
| 017 | 417805-5 | Schakelknop (H/L) Hp2051/F |
| 018 | 210137-7 | Kogellager 606Zz A |
| 019 | 153622-6 | Tandwielset Hp2051/F A |
| 020 | 210137-7 | Kogellager 606Zz A |
| 021 | 227119-2 | Tandwiel 29-37 Hp2051/71F A |
| 022 | 216040-0 | Stalen Kogel 3.5 A |
| 023 | 256251-5 | Pen 4 Hp1631 |
| 024 | 421810-6 | Pakkingring Hp2051/F |
| 025 | 153620-0 | Tandwielhuisdeksel Hp2051/F A |
| 026 | 418083-0 | Schakelknop Hp2051/F A |
| 027 | 417802-1 | Schakelbasis Hp2051/F |
| 028 | 263002-9 | Rubber Pen 4 6413 A |
| 029 | 256251-5 | Pen 4 Hp1631 |
| 030 | 232143-2 | Bladveer Hp2030 |
| 031 | 345225-2 | Blokkeerplaat Hp2051/F |
| 032 | 417804-7 | Schuifplaat Hp2051/F |
| 033 | 345223-6 | Schakelgaffel Hp2051/F |
| 034 | 268092-7 | Pin 4 Hp2051/F |
| 035 | 257857-2 | Ring 8 HP2071 A |
| 036 | 210005-4 | Kogellager 608Ddw A |
| 037 | 240065-2 | Waaier 52 |
| 038 | 517464-6 | Anker 220-240V Hp2071F |
| 039 | 681636-0 | Isolatiering 9521Nb-9522Nb A |
| 040 | 211021-9 | Kogellager 607Llb A |
| 041 | 421494-0 | Rubber Ring 9521Nb-9522Nb |
| 042 | 418269-6 | Opvulplaat Hp2071F |
| 043 | 266004-4 | Tapschroef Pt4X70 |
| 044 | 633573-4 | Veld 220-240V Hp2071F |
| 045 | 183658-1 | Motorhuis HP2070F P |
| 046 | 631534-8 | Toerenregelunit Hp2071F A |
| 047 | 850579-9 | Naamplaat Hp2071F* |

# Partdrawing for  HP2071F - Pagina 1

| Nr. | Part nr. | Name |
|---|---|---|
| 048 | 819063-3 | Label Makita |
| 049 | 191962-4 | Koolborstel Set Cb-419 P |
| 050 | 638236-7 | KOOLBORSTELHOUDER HP2071F P |
| 051 | 686038-5 | Aansluiting Motor Hp2071F |
| 052 | 650212-1 | Schakelaar Hp2071F |
| 053 | 418273-5 | Handgreepdeksel HP2070 P |
| 054 | 265999-8 | Tapschroef 4X25 P |
| 055 | 687053-2 | Klemstrip A |
| 056 | 265995-6 | Tapschroef 4X18 P |
| 057 | 631545-3 | Licht Circuit Hp2071F A |
| 058 | 682566-8 | Kabeltule 10-110 |
| 059 | 665383-1 | Netsnoer 2X1.00 2.2Mtr A |