HiKOKI

# OEM UL18DF

| Item No. | Code No. | Description | No. Used | Remarks |
|---|---|---|---|---|
| 1 | 381505 | HANDLE | 1 | |
| 2 | 381515 | AC CABLE | 1 | |
| 3 | 381514 | DC CABLE | 1 | |
| 4 | 381507 | DIAL KNOB | 1 | |
| 5 | 381516 | OUTER COVER SET | 1 | |
| 6 | | BRAND LABEL | 1 | |
| 7 | 381506 | KNOB | 2 | |
| 8 | 381508 | SWITCH BOARD | 1 | |
| 9 | 381520 | SCREW ST3X14 (4 PCS.) | 4 | |
| 10 | 381523 | SCREW ST3X16 (4 PCS.) | 4 | |
| 11 | 381510 | PRESSURE PLATE OF WIRE | 2 | |
| 12 | 381511 | FOAM COVER PLATE | 1 | |
| 13 | 381517 | WIRING SET | 1 | |
| 14 | 381521 | SCREW ST3X12 (4 PCS.) | 4 | |
| 15 | 381509 | POWER BOARD | 1 | |
| 16 | 381512 | RELAY PCBA | 1 | |
| 17 | 381522 | SCREW ST3X10 (3 PCS.) | 3 | |
| 18 | 381524 | SCREW ST3X12 (8 PCS.) | 8 | |
| 19 | 381546 | SEALING STRIP | 1 | |
| 20 | 381518 | HINGE (2 PCS.) | 2 | |
| 21 | 381525 | SCREW ST3X10 (8 PCS.) | 8 | |
| 22 | 381519 | INNER BODY SET | 1 | |
| 23 | | NAME PLATE | 1 | |
| 24 | 381485 | PARTITION | 1 | |
| 25 | 381526 | SCREW ST3X12 (2 PCS.) | 2 | |
| 26 | 381513 | BEER BUCKLE | 1 | |

* ALTERNATIVE PARTS

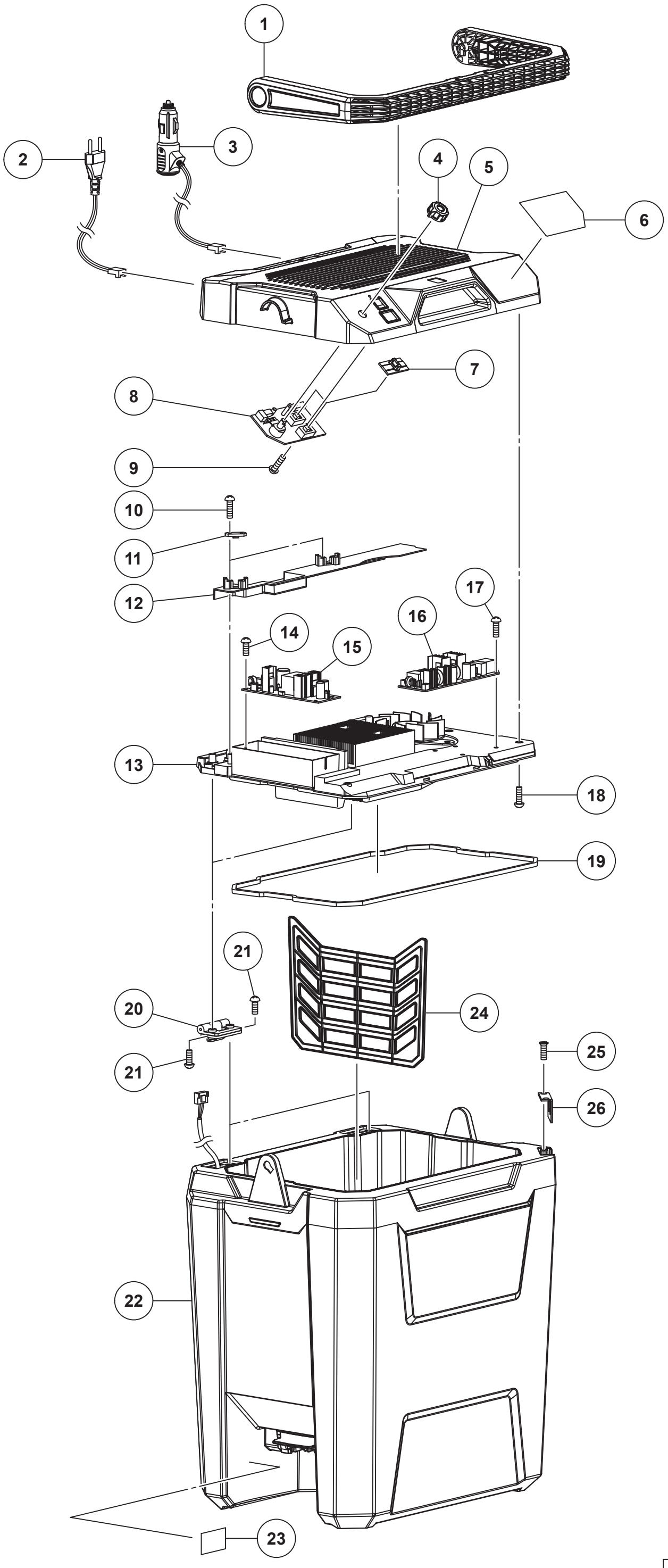


| MODEL |
| --- |
| UL18DF |

Rev.1