HiKOKI

CHARGER

Item No.	Code No.	Description	No. Used	Remarks
2	500520Z	CORD (TAIWAN)	1	FOR TPE
2A	337634	CORD	1	FOR USA,CAN
*2A	337635	CORD	1	FOR EUROPE,IND
*2A	337636	CORD	1	FOR AUS,NZL
*2A	326212	CORD (U.K)	1	FOR GBR
*2A	331985	CORD	1	FOR BRA
*2A	329602	CORD	1	FOR CHN
*2A	324743	CORD	1	FOR KOR
3	326361	FUSE (250V-2A)	1	
4	324900	TERMINAL (A)	3	
6	326358	TAPPING SCREW (W/FLANGE) D3X18	4	
7		NAME PLATE	1	
8	379429	CASE (A).(B).PCB ASS'Y 230V SET	1	INCLUD.3,4
*8	379425M	CASE (A).(B).PCB ASS'Y 120V SET	1	INCLUD.3,4 FOR USA,CAN
*8	379433	CASE (A).(B).PCB ASS'Y 240V SET	1	INCLUD.3,4 FOR AUS,NZL
*8	379430	CASE (A).(B).PCB ASS'Y 230V SET	1	INCLUD.3,4 FOR GBR
*8	379432	CASE (A).(B).PCB ASS'Y 220V SET	1	INCLUD.3,4 FOR CHN
*8	379431	CASE (A).(B).PCB ASS'Y 220V SET	1	INCLUD.3,4 FOR KOR
*8	379434	CASE (A).(B).PCB ASS'Y 110V SET	1	INCLUD.3,4 FOR TPE

* ALTERNATIVE PARTS

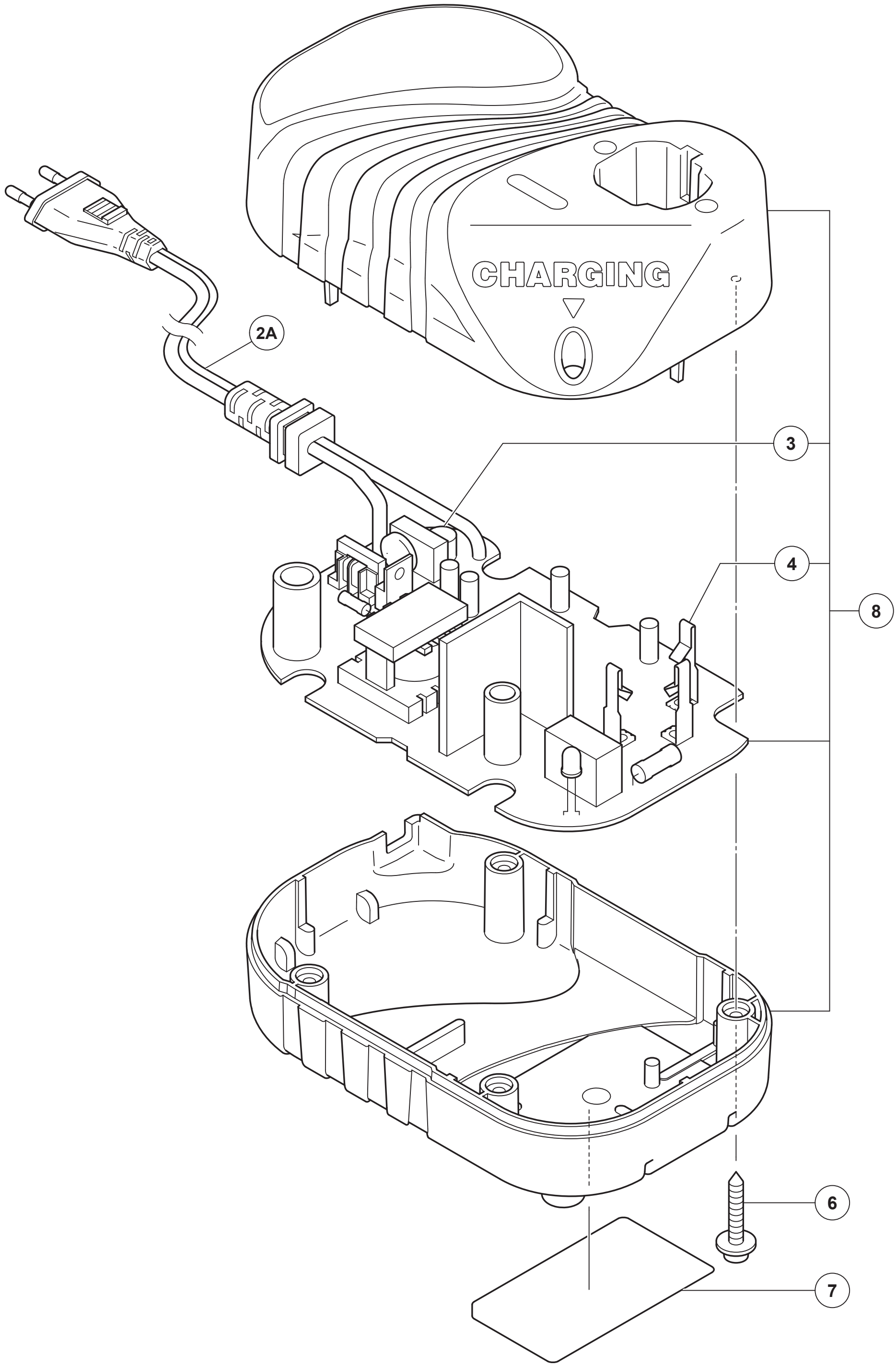

MODEL
UC3SFL

Rev.9
25.11.2022