HiKOKI

CHARGER

Item No.	Code No.	Description	No. Used	Remarks
*1	382466	BRAND LABEL (HIKOKI)	1	
*1	382466M	BRAND LABEL (METABOHPT)	1	
2	382469	CASE (A)	1	
3	339271	LED PCB	1	
*4	339341	TAPPING SCREW (W/FLANGE) D2X8 (BLACK)	7	
5	382470	USB PCB (A)	1	
5	382471	USB PCB (A)	1	FOR USA,CAN
*6	382474	PCB ASS'Y 220V-240V	1	INCLUD.18
*6	382473	PCB ASS'Y 120V	1	INCLUD.18 FOR USA,CAN
*7	327174	TP TAPPING SCREW D3X8	2	
8	382475	USB PCB (B)	1	
9	338718	USB CAP	1	
10	339273	FILTER	1	
11	370409	CASE (B)	1	
12	326358	TAPPING SCREW (W/FLANGE) D3X18	4	
13	338717	RUBBER (A)	4	
14		NAME PLATE	1	
*15	382467	PANEL SHEET	1	
*15	382468	PANEL SHEET	1	FOR AUS,NZL
16	338715	COVER	1	
17	370114	AIR DUCT	1	
18	370116	FUSE (10A/250V)	1	
19	339379	RUBBER (B)	2	FOR USA,CAN
*20	500556Z	CORD	1	
*20	500557Z	CORD	1	FOR GBR,MAL
*20	500558Z	CORD	1	FOR AUS,NZL
*20	500559Z	CORD	1	FOR CHN
*20	500560Z	CORD	1	FOR USA,CAN
21	370115	FAN	1	
		STANDARD ACCESSORIES		
501	381990	BATTERY BSL 3640MVT (EUROPE,AUS,NZL)	2	INCLUD.502 FOR EUROPE,GBR
502	329897	BATTERY COVER	2	FOR EUROPE,GBR

* ALTERNATIVE PARTS

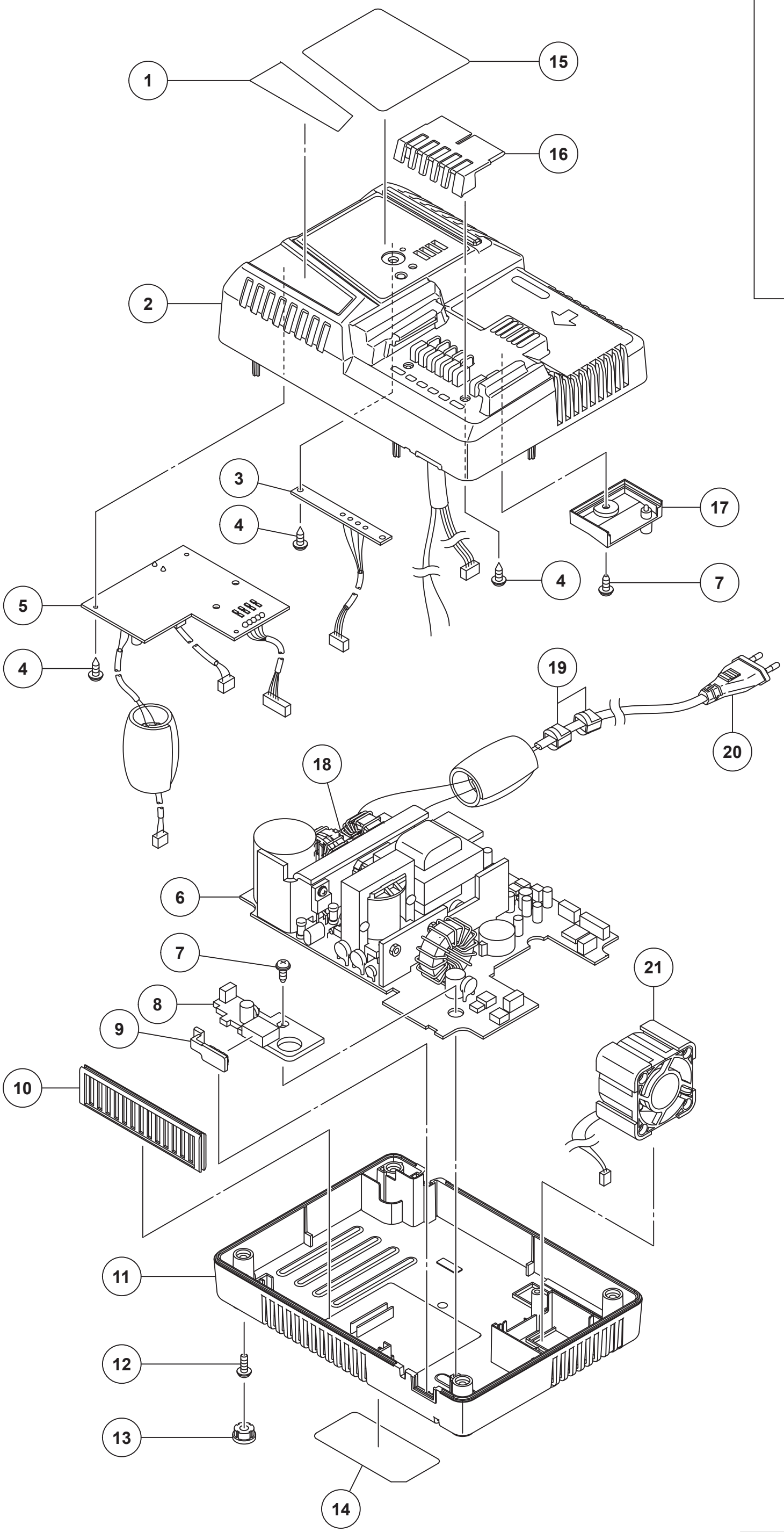

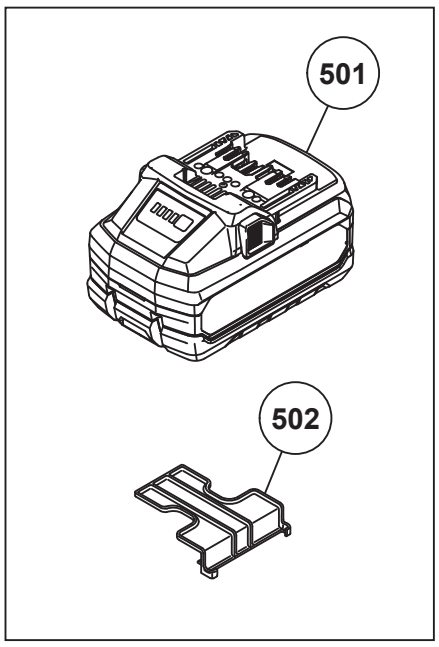

MODEL
UC36YSL2(1/2)

Rev.1

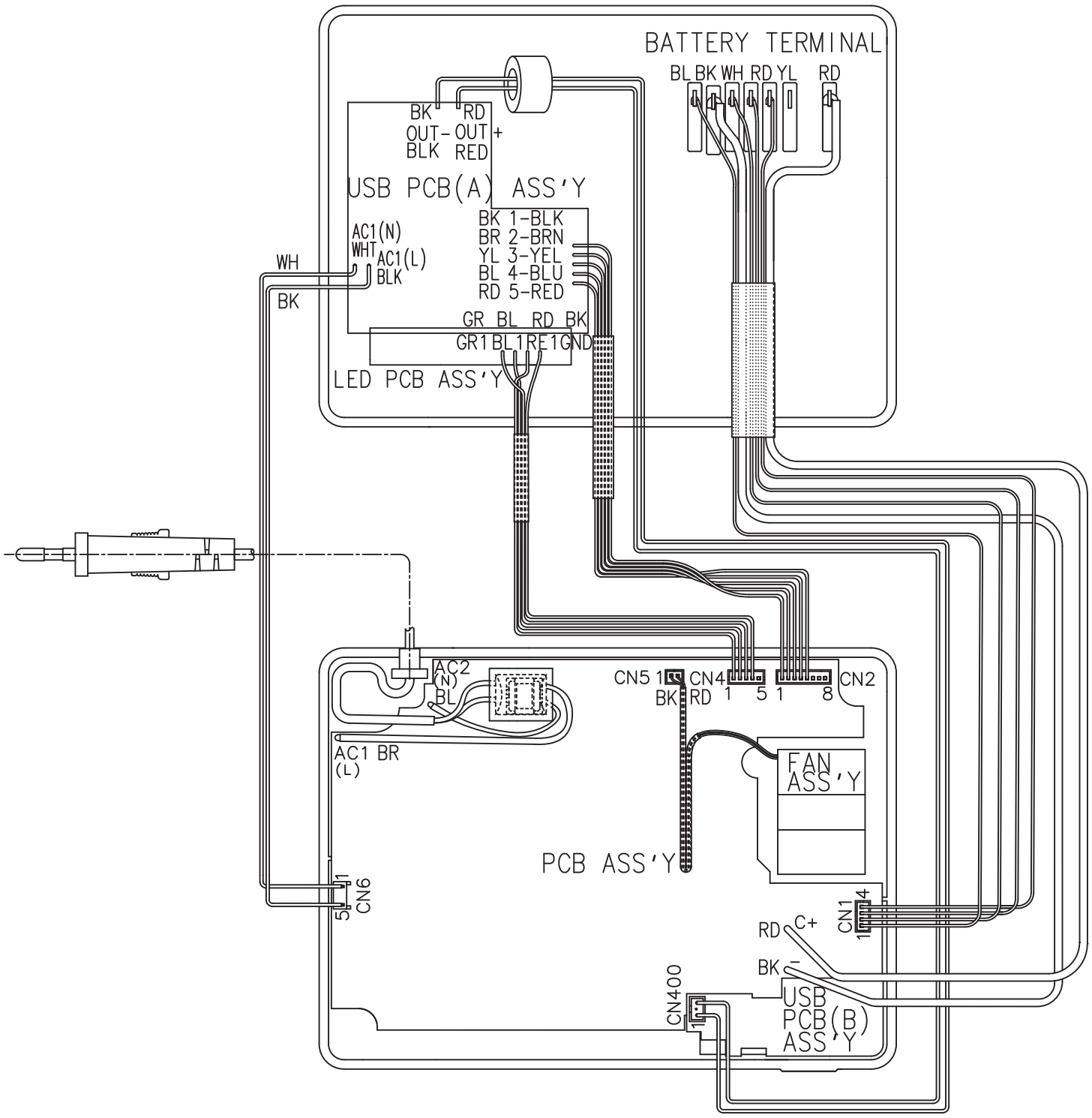

MODEL
UC36YSL2(2/2)

Rev.1