HiKOKI

CHARGER

Item No.	Code No.	Description	No. Used	Remarks
1A	370898	CASE (A)	1	
*2	324743	CORD	1	FOR KOR
2A	500520Z	CORD (TAIWAN)	1	FOR TPE
*2A	337636	CORD	1	FOR AUS,NZL
*2A	326212	CORD (U.K)	1	FOR GBR
*2A	331985	CORD	1	FOR BRA
*2A	329602	CORD	1	FOR CHN
2B	337634	CORD	1	FOR USA,CAN
2B	337635	CORD	1	FOR EUROPE
3A	335779	FUSE (T3.15A/250V)	1	
4A	339184	FUSE (250V-5A)	1	
*5B	337910	PRINTED CIRCUIT BOARD ASS'Y 110V-120V	1	
*5B	337911	PRINTED CIRCUIT BOARD ASS'Y 220V-240V	1	
6	324733	CASE (B)	1	
7A	376623	TP. TORX SCREW D3X18	4	
8		NAME PLATE	1	

* ALTERNATIVE PARTS

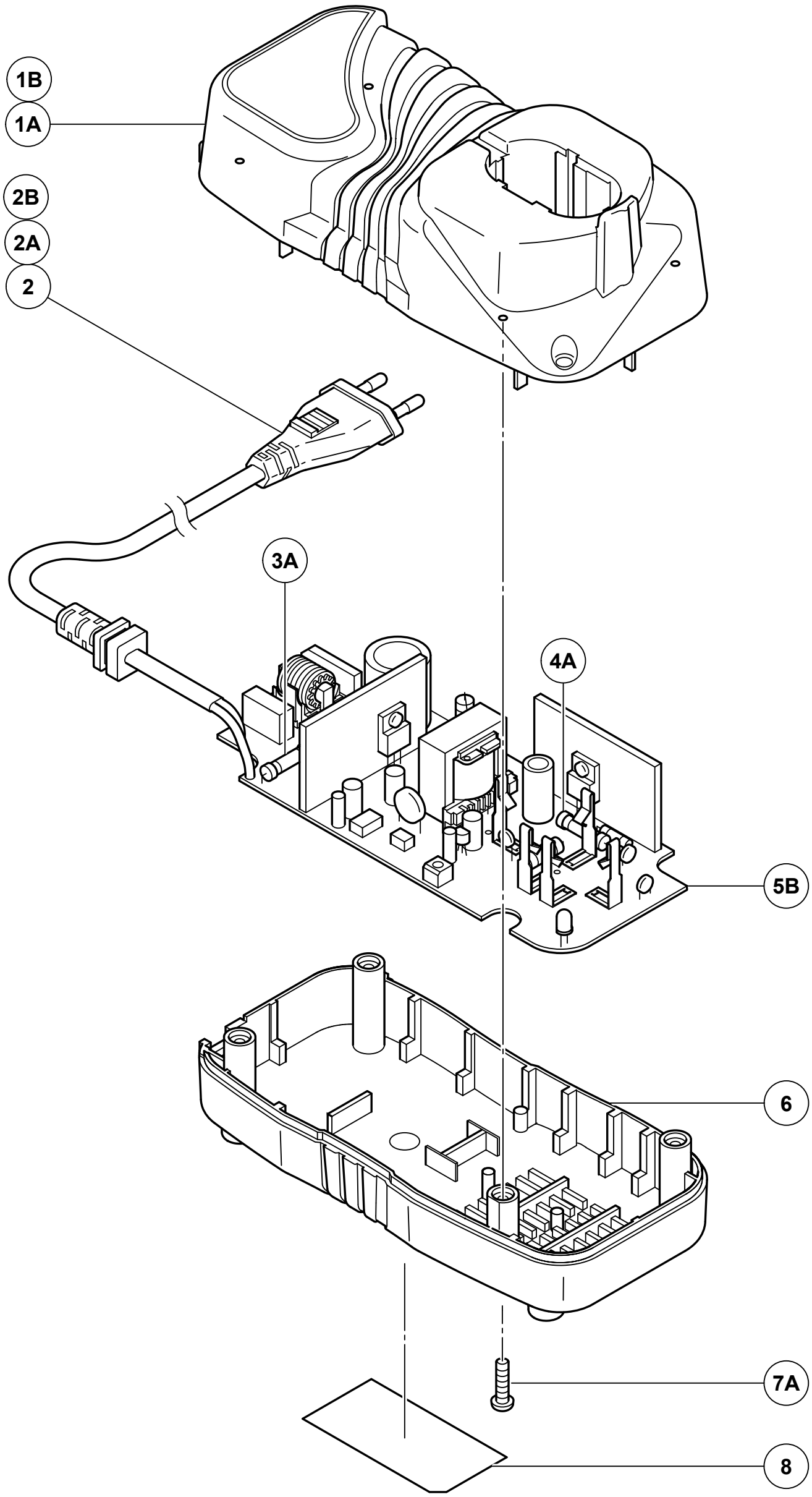

MODEL
UC18YG

Rev.10
10.3.2021