HiKOKI

CHARGER

Item No.	Code No.	Description	No. Used	Remarks
2A	379428	FAN	1	
3	327174	TP TAPPING SCREW D3X8	4	
4	332540	FUSE (T3.15A/250V)	1	
5	336270	CASE (B)	1	
6A	376623	TP. TORX SCREW D3X18	4	
9	336276	LED-PRINTED CIRCUIT BOARD	1	
10	336271	AIR DUCT	1	
*11	336281	CORD	1	FOR GBR,UAE,HKG,SAU
*11	336283	CORD	1	FOR SIN,VIE,IND,KOR
*11	336285	CORD	1	FOR BRA
*11	336278	CORD	1	FOR CHN
*11A	500524Z	CORD	1	
*11A	376624	CORD	1	FOR USA,CAN,MEX
*11A	500521Z	CORD (TAIWAN)	1	FOR TPE
*11A	337907	CORD	1	FOR AUS,NZL
13	336275	FILTER	1	
14		NAME PLATE	1	
14		FOR USA,CAN	1	
15		NAME PLATE	1	
15		EXCEPT FOR USA,CAN	1	
16	338715	COVER	1	
17	339341	TAPPING SCREW (W/FLANGE) D2X8 (BLACK)	2	
*18	379427	CASE (A).PCB ASS'Y 220V-240V	1	INCLUD.4
*18	379424M	CASE (A).PCB ASS'Y 120V	1	INCLUD.4 FOR USA,CAN,MEX
*18	379426	CASE (A).PCB ASS'Y 110V	1	INCLUD.4 FOR TPE

* ALTERNATIVE PARTS

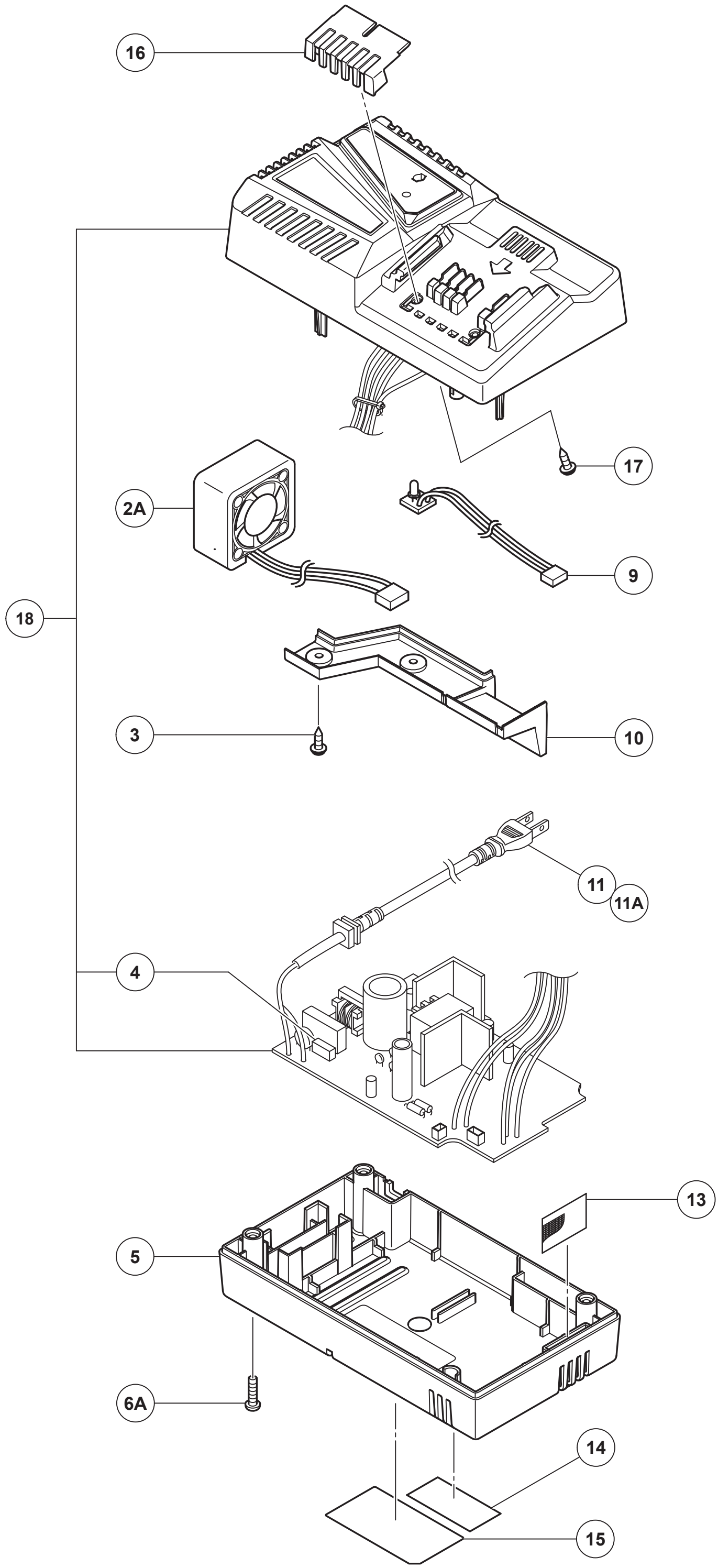

Rev.8
4.10.2022

MODEL
UC18YFSL