HiKOKI

CHARGER

Item No.	Code No.	Description	No. Used	Remarks
1A	337292	CASE (A).(B) SET	1	
1A	337293	CASE (A).(B) SET	1	FOR USA,CAN
2A	376623	TP. TORX SCREW D3X18	4	
3		NAME PLATE	1	
				FOR AUS,NZL
*4	337635	CORD	1	
*4	326212	CORD (U.K)	1	FOR GBR,MAL,HKG,UAE
*4	324743	CORD	1	FOR IND,VIE,SIN
*4	337636	CORD	1	FOR AUS,NZL
*4	337634	CORD	1	FOR USA,CAN
*4	331985	CORD	1	FOR BRA
*4	329602	CORD	1	FOR CHN
4A	500520Z	CORD (TAIWAN)	1	FOR TPE
5	337637	FUSE (250V/3.15A)	1	
6	337638	BAND	3	FOR EUROPE,RUS,GBR,MAL,AUS,NZL
*7	337295	PRINTED CIRCUIT BOARD ASS'Y 110V-127V	1	INCLUD.5 FOR USA,BRA
*7	337296	PRINTED CIRCUIT BOARD ASS'Y 220V-240V	1	INCLUD.5
7A	337294	PRINTED CIRCUIT BOARD ASS'Y 100V-110V	1	INCLUD.5 FOR TPE
8		NAME PLATE	1	
				EXCEPT FOR USA,CAN

* ALTERNATIVE PARTS

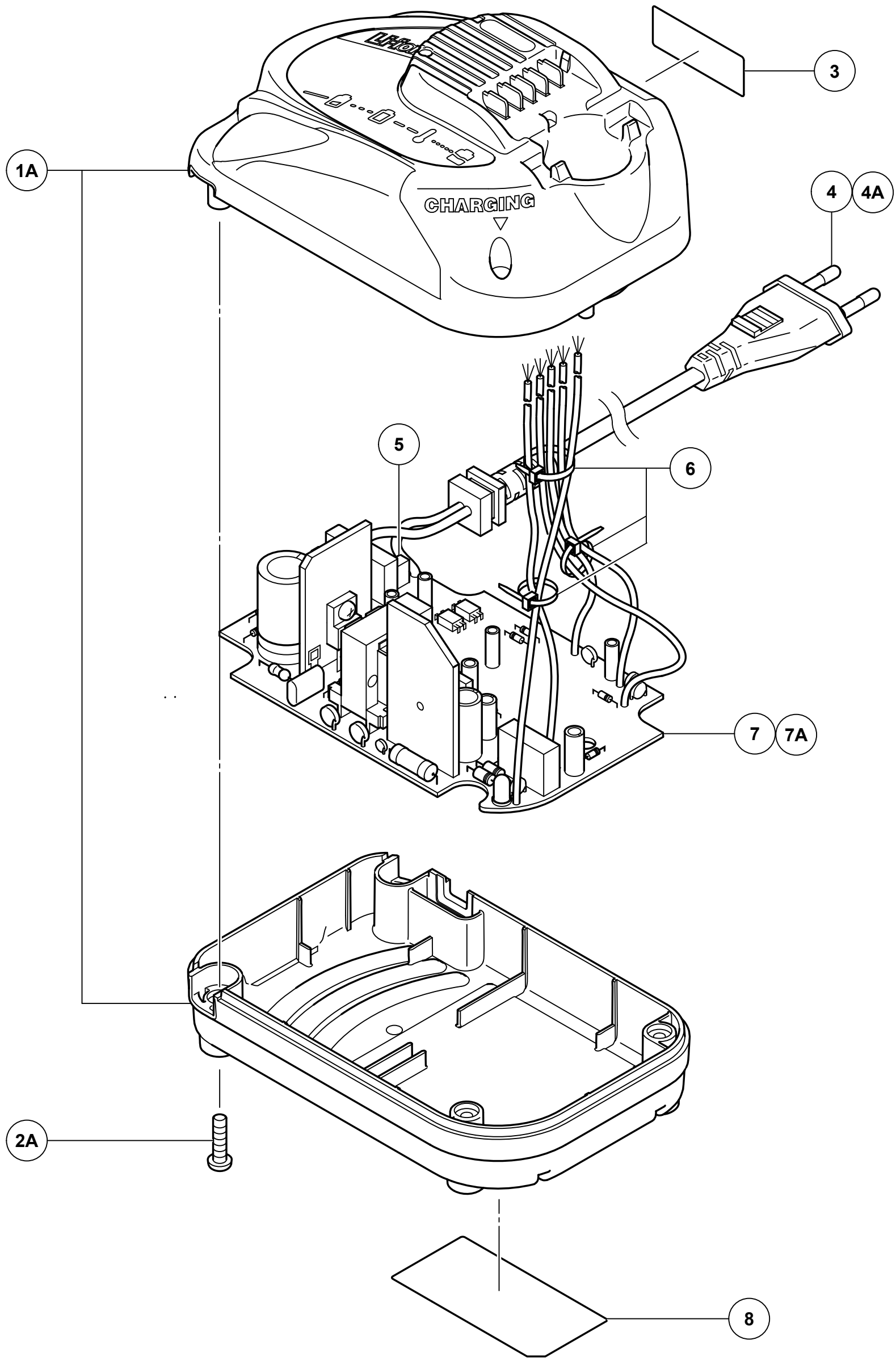

MODEL
UC10SL2

Rev.5
10.3.2021