HiKOKI

OEM UB18DE

Item No.	Code No.	Description	No. Used	Remarks
1		MAIN BODY	1	
2	379473	LENS	1	
3	379472	LENS COVER	1	
4	379474	MAIN PCBA	1	
*5		NAME PLATE (C)	1	
				FOR EUROPE,USA,CAN
6	379476	SCREW D3X20	1	
7	379475	SCREW D3X12	5	
8		NAME PLATE	1	

* ALTERNATIVE PARTS

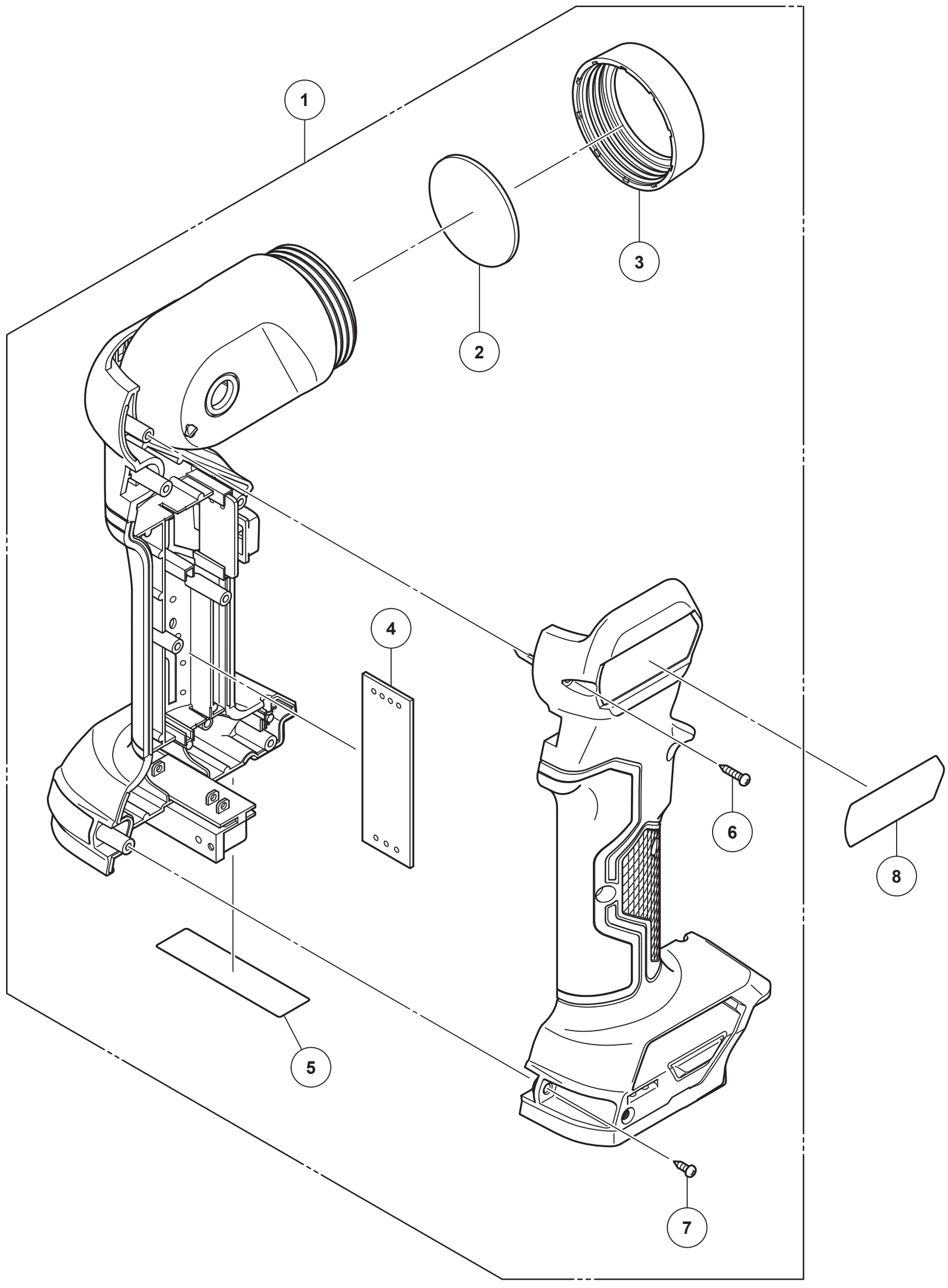

Rev.1

MODEL
UB18DE