HiKOKI

ORBITAL SANDER SV15YC

Item No.	Code No.	Description	No. Used	Remarks
1	371825	WASHER	1	
2	371826	RETAINING RING	2	
3	371827	BALL BEARING 15X32X9	1	
4	371828	DUST WASHER	1	
5	371829	FAN	1	
6	371830	INDEX BOLT	1	
7	371831	BEARING HOLDER	1	
8	371832	O-RING	1	
9	371833	CARRIER	1	
10	371834	RETAINING SHEET	1	
11	371835	TORX FLAT SCREW M4	3	
12	371836	BAFFLE	1	
13	371837	FAN GUIDE	1	
14	371838	BRAKE RING	1	
15	371839	PAD	1	
16	371840	HEX. SOCKET HD. BOLT M8	1	
17		SANDING PAPER 150MM AA120	1	
18	371241	TAPPING SCREW ST4.2X19	9	
19A	371846	HOUSING SET	1	
*20	371869	CORD (EUROPE)	1	
21	371272	CORD ARMOR	1	
22	371848	TURBO BOOST SWITCH	1	
23	371853	FILLISTER HD. SCREW M3	2	
24	371854	SWITCH	1	
25	371849	BB RUBBER PLUG	2	
26	371251	RUBBER	2	
27		NAME PLATE	1	
28	371850	SIDE HANDLE	1	
29	371851	SQUARE NUT	1	
*31	371844	CONTROLLER	1	
32	371841	CHOKE COIL	2	
33	371842	INTERNAL WIRE SET	1	
*34	371856	STATOR	1	
35	371857	BALL BEARING 6X19X6	1	
*36	371859	CARBON BRUSH (1 PAIR)	2	
*37	371861	ARMATURE	1	
38	371862	TORX SCREW M4	8	
39	371863	BEARING FLANGE ASS'Y	1	INCLUD.38
40	371864	INDICATION LABEL	1	
41		BRAND LABEL	1	
		STANDARD ACCESSORIES		
501	944459	HEX. BAR WRENCH 5MM	1	
502A	373748	DUST BAG	1	
503	371872	GREASE SF 016 50G	1	

* ALTERNATIVE PARTS

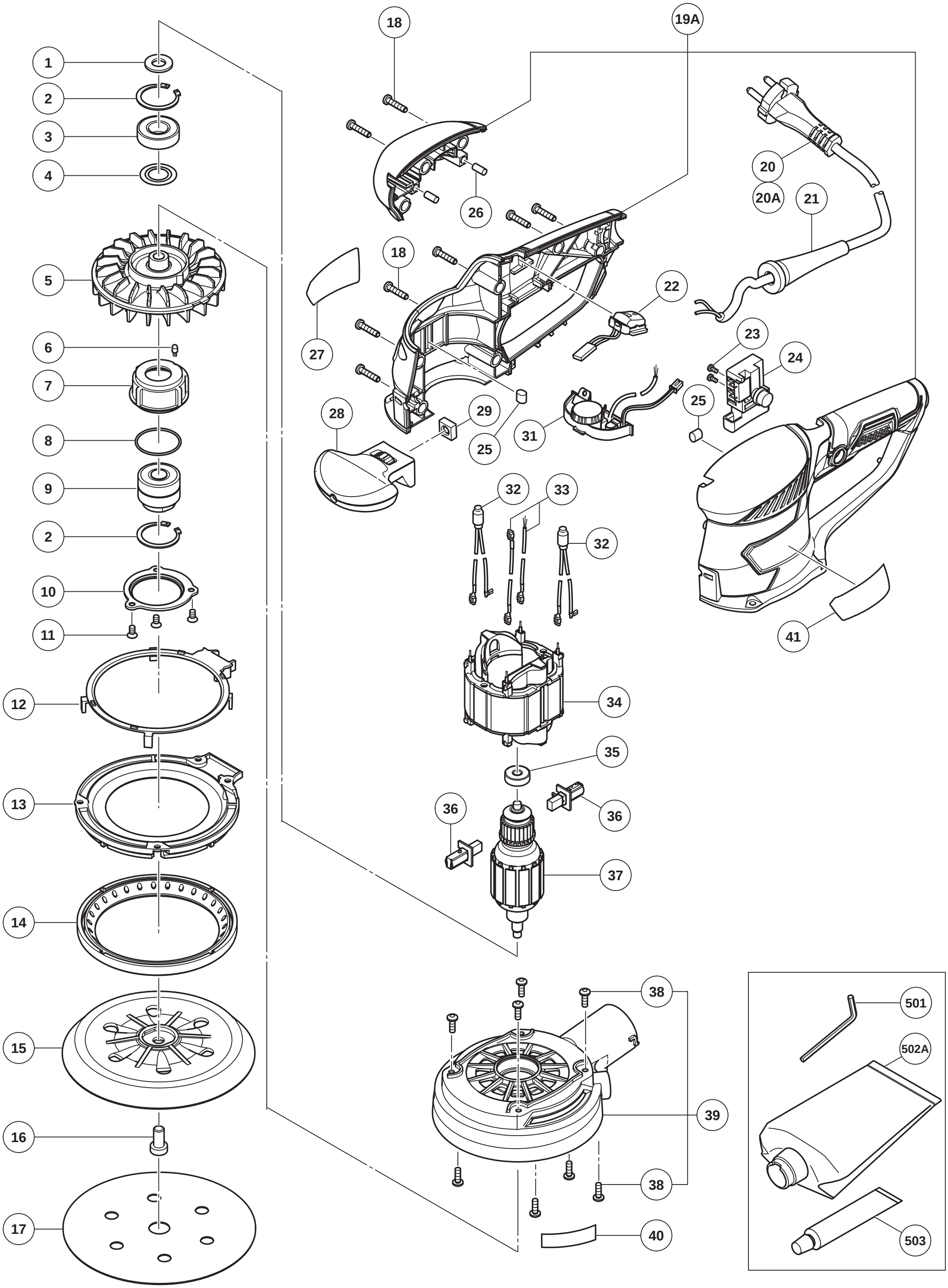

MODEL
SV15YC

Rev.4