HiKOKI

CORDLESS DRIVER DRILL DS18DA

Item No.	Code No.	Description	No. Used	Remarks
1	337426	LEFT-HAND HEXALOBULAR M5	1	
2	376359	DRILL CHUCK 13TLRA-N	1	
3	374938	GEAR BOX (D)	1	
*4	378333	MOTOR	1	
5	313687	TAPPING SCREW (W/FLANGE) D3X16 (BLACK)	8	
6		NAME PLATE	1	
7	374382	SHIFT KNOB	1	
8	329548	PUSHING BUTTON (A)	1	
11	378332	SWITCH TERMINAL	1	
12	327002	LOCK NUT M4 (BLACK)	2	
*13	378335	INTERNAL WIRE FERRITE SET	1	FOR EUROPE,IND,ISR,SAF
14	378328	HOUSING (A).(B) SET	1	
*15	377796	BATTERY BSL 1820M (EUROPE,AUS,NZL)	2	INCLUD.503
*16	378330	WIRING ASS'Y	1	INCLUD.4,11,13
		STANDARD ACCESSORIES		
501		CHARGER (MODEL UC 18YKSL)	1	
502	983006	+ DRIVER BIT NO.2 65L	1	
503	329897	BATTERY COVER	1	
504	336642	CASE	1	
		OPTIONAL ACCESSORIES		
601	955657	- DRIVER BIT (A) 3MMX70L	1	
602	955659	- DRIVER BIT (A) 4MMX70L	1	
603	955674	- DRIVER BIT (A) 6MMX70L	1	
604	983004	+ DRIVER BIT NO.1 65L	1	
605	983011	+ DRIVER BIT NO.3 65L	1	
606	375800	HOOK SET	1	

* ALTERNATIVE PARTS

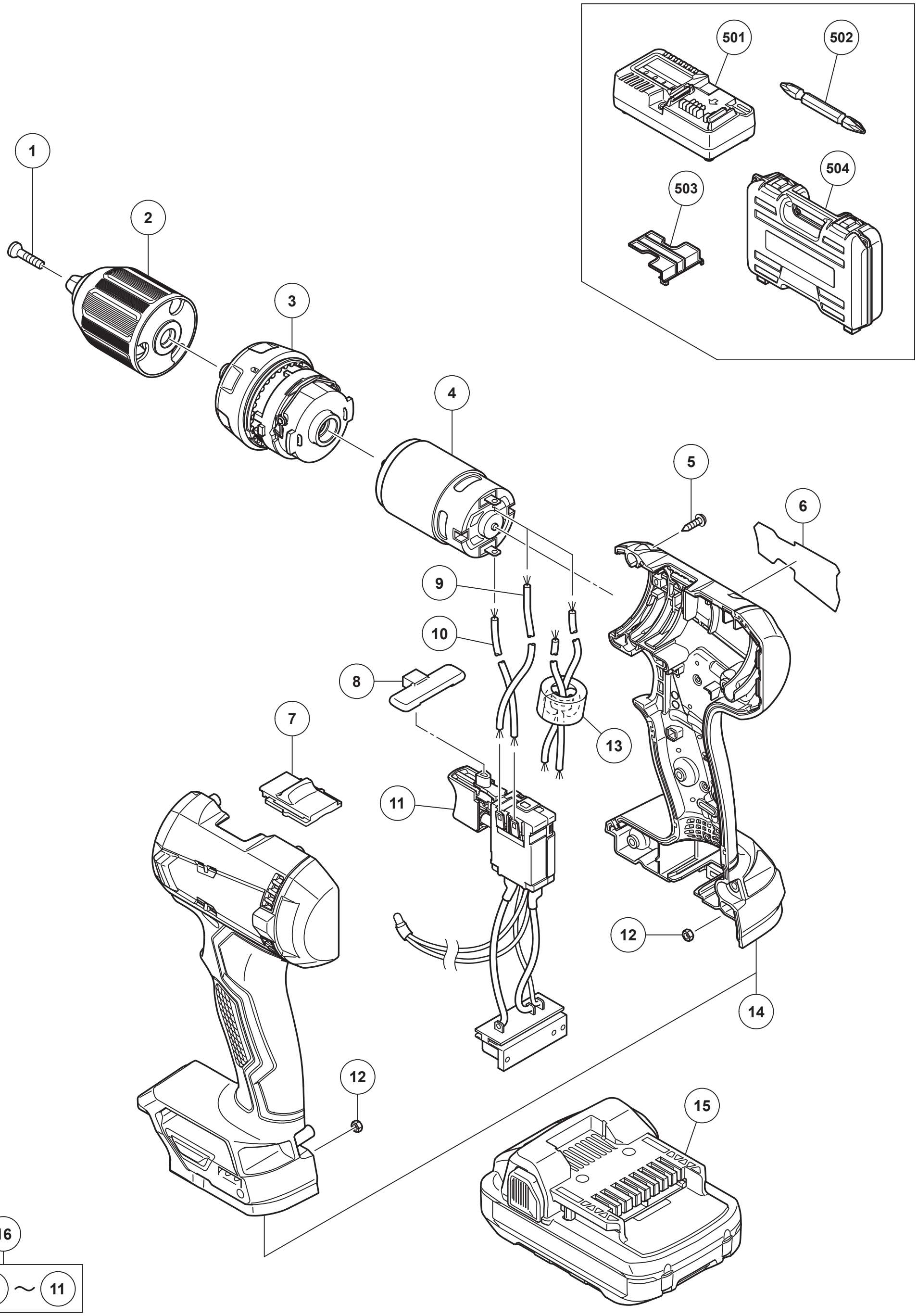

16

4 9 ～ 11

16

4 11 13

MODEL

DS18DA

Rev.1