HiKOKI

SMALL SIZE DRILL D6SH

Item No.	Code No.	Description	No. Used	Remarks
1A	375606	CHUCK WRENCH	1	
*2	314679	DRILL CHUCK 6.5TLRA	1	INCLUD.1
3	314668	SPINDLE	1	
4	6001VV	BALL BEARING 6001VV	1	
5	314669	GEAR	1	
6	314670	METAL	1	
7	987105	O-RING (S-10)	1	
8	626VVM	BALL BEARING 626VVC2PS2L	1	
*9	360439E	ARMATURE 220V-230V	1	
*10	340391E	STATOR (B) 220V-230V	1	
11	626VVM	BALL BEARING 626VVC2PS2L	1	
12	314671	THRUST SPRING	1	
*13A	377964	HOUSING (A).(B) SET	1	FOR EUROPE,NZL,SAF,RUS,ISR,LBN,SYR,UAE,
				OMA
14		NAME PLATE	1	
15	301653	TAPPING SCREW (W/FLANGE) D4X20 (BLACK)	6	
16	314677	STOPPER BOLT	1	FOR DRILL CHUCK 6.5TLRA
17	314676	STOPPER HOLDER	1	FOR DRILL CHUCK 6.5TLRA
18	314675	STOPPER ROD	1	FOR DRILL CHUCK 6.5TLRA
19		BRAND LABEL	1	
20	963069	HEX. CAP NUT M5	2	
21	314678	HOOK	1	
22	930483	BRUSH HOLDER	2	
23	999041	CARBON BRUSH (1 PAIR)	2	
24	980063	TERMINAL	2	
25	938051	CORD ARMOR D10.1	1	
26	937631	CORD CLIP	1	
27	984750	TAPPING SCREW (W/FLANGE) D4X16	2	
*28	500409Z	CORD	1	
29	994734	SWITCH (B) (2P SCREW TYPE) W/LOCK	1	
*30	930804	TERMINAL M4.0 (10 PCS.)	2	
*31	930039	NOISE SUPPRESSOR	1	EXCPT THA,INA,UAE,SIN,CHN
32	314674	STOPPER PIECE	1	FOR DRILL CHUCK 6.5TLRA

* ALTERNATIVE PARTS

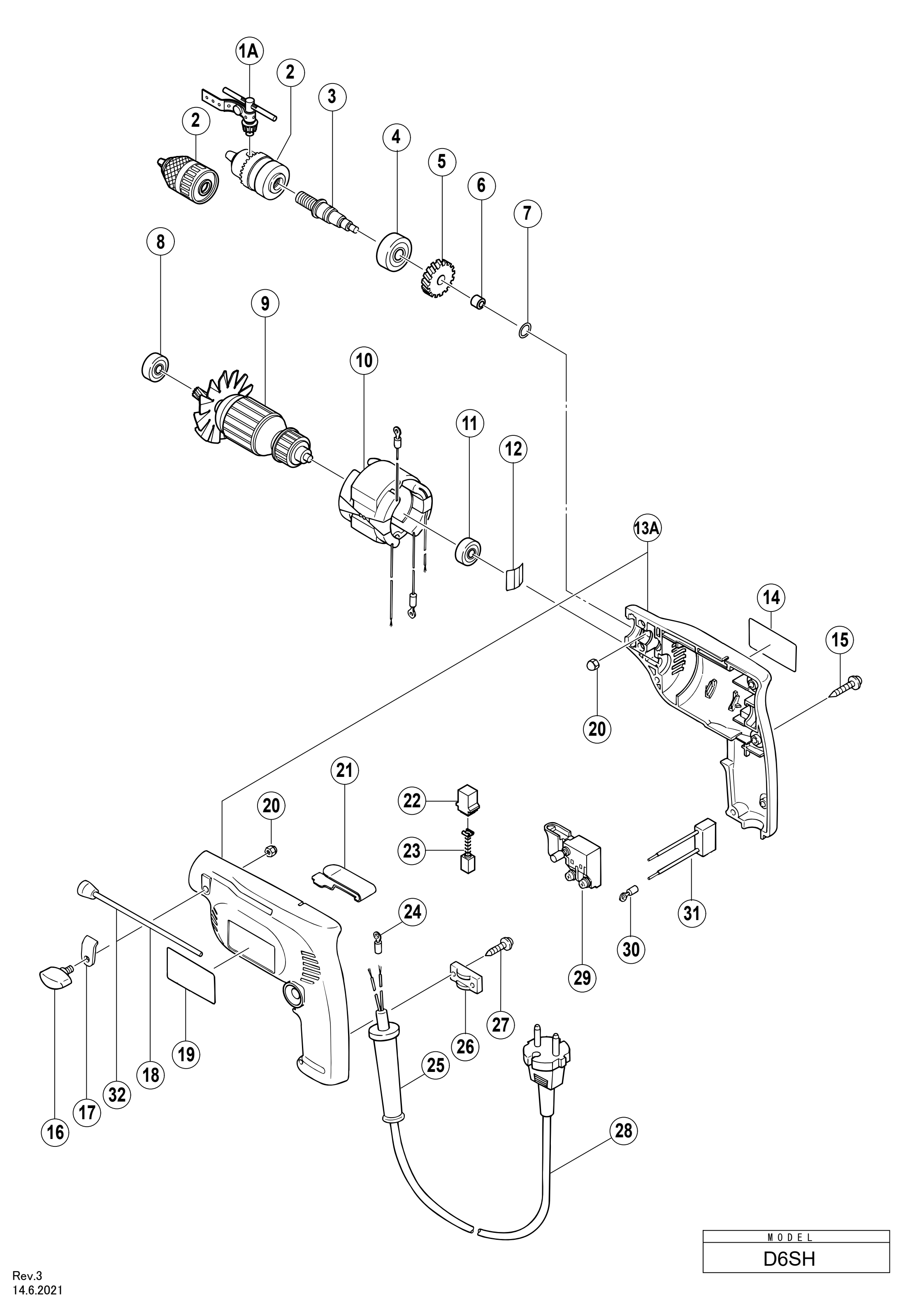

MODEL
D6SH

Rev.3
14.6.2021